BROMPTON

ROLLER FRAME - G, GE

IMPORTANT INFORMATION

- It is vital that you follow the correct fitting procedure and tighten the fixing bolt correctly
- If you are unsure of the correct fitting process please consult your Brompton dealer or Brompton Customer Service **support@brompton.co.uk**

This roller frame is only compatible with the G Line and G Line Electric Brompton bicycle. The load capacity of the rack is 10kg. Ensure that when carrying luggage you do not exceed the maximum load for the bicycle (including luggage and rider) of 130Kg. Using incorrect luggage may interfere with steering and could be dangerous.

Fig. 1

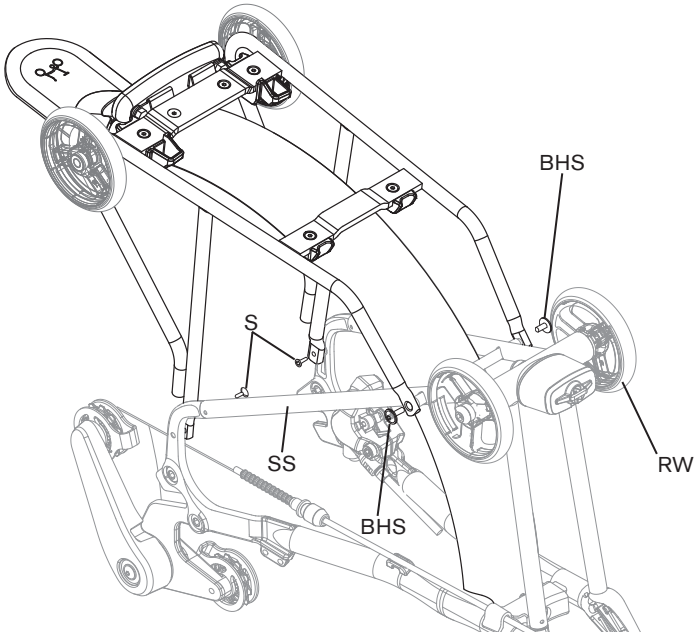

FITTING

To fit the rear rack, it is recommended that this is done with the bike in a stand and with the rear wheel removed.

Start by moving the rack in place, orientated as shown, then fit the two rack arms to the top of the seat stays SS by fitting the two button head screws BHS using a 3mm hex key. Tighten to 3Nm (fig. 1). Next, fit the other two rack arms to the inner, bottom section of the seat stays as shown using the remaining screws S. Tighten to 3Nm

REMOVAL

To remove the rear rack, it is recommended that this is done with the bike in a stand and with the rear wheel removed.

Undo and remove the screws BHS securing the rack to the top section of the seat stays SS using a 3mm hex key. Undo and remove the screws S securing the rack to the inner, bottom section of the seat stays SS.

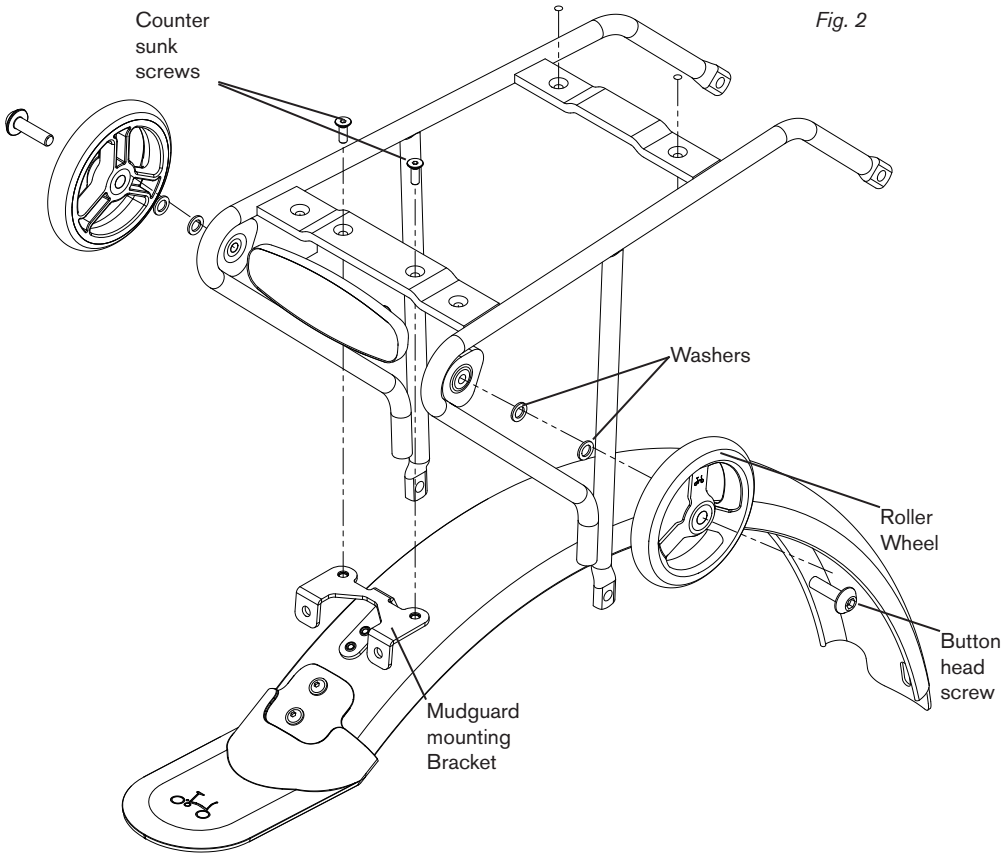

Fig. 2

WARNING

The maximum load of the rear rack is 10kg, the maximum load of the front carrier block is 10kg. Do not exceed the maximum load for the front and rear luggage or modify the rear rack, front carrier block or front luggage frame. The fixings of the front carrier block and rear rack should be checked regularly. The front carrier block and rear rack are not suitable for mounting of a child seat. Do not attempt to carry luggage anywhere else on the bicycle. The bike and rear rack are not designed to pull a trailer.

When the luggage carriers are loaded the bicycle may behave differently, steering and braking may be affected. Luggage should be loaded evenly.

Before riding ensure that the front bag, front carrier block, rear rack and rear bag are secure and there are no loose straps or items of luggage that could get caught in the wheels of the bicycle.

Ensure that any luggage fitted does not obscure the reflectors and any lighting fitted to the bike.

The Brompton roller frame and rear luggage are only compatible with the Brompton G Line & Brompton G Line Electric bikes. Only luggage carriers and luggage manufactured or distributed by Brompton Bicycle Ltd should be used with the Brompton bike.